FIRST NATIONAL BATTERY INDUSTRIAL (PTY) LTD

THROUGH CARING WE LEAD

SINGLE BEAM LOCOLIGHT

BENONI (011) 741-3601
EAST LONDON (043) 731-1111
CARLETONVILLE (018) 787-5838
KLERKSDORP (018) 469-2892
RUSTENBURG (014) 592-8369
WELKOM (057) 353-1188

Email: marketing@battery.co.za
www.battery.co.za

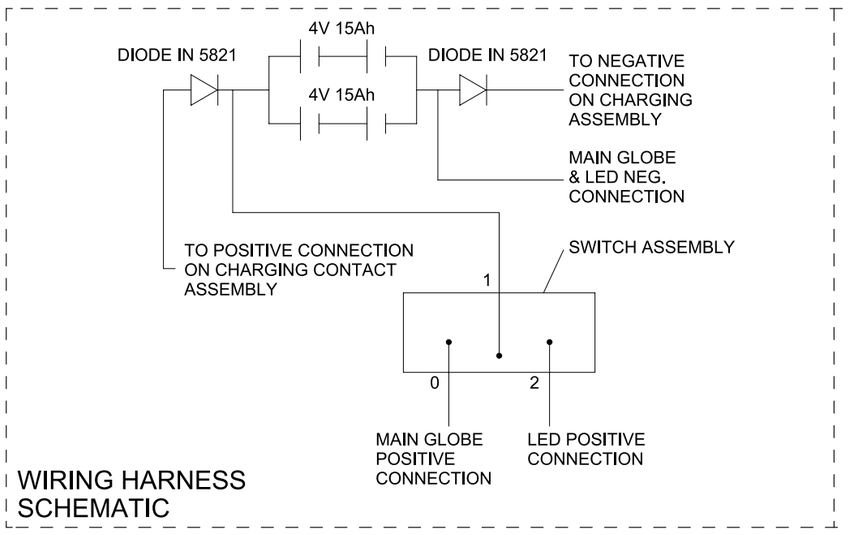

WIRING HARNESS SCHEMATIC

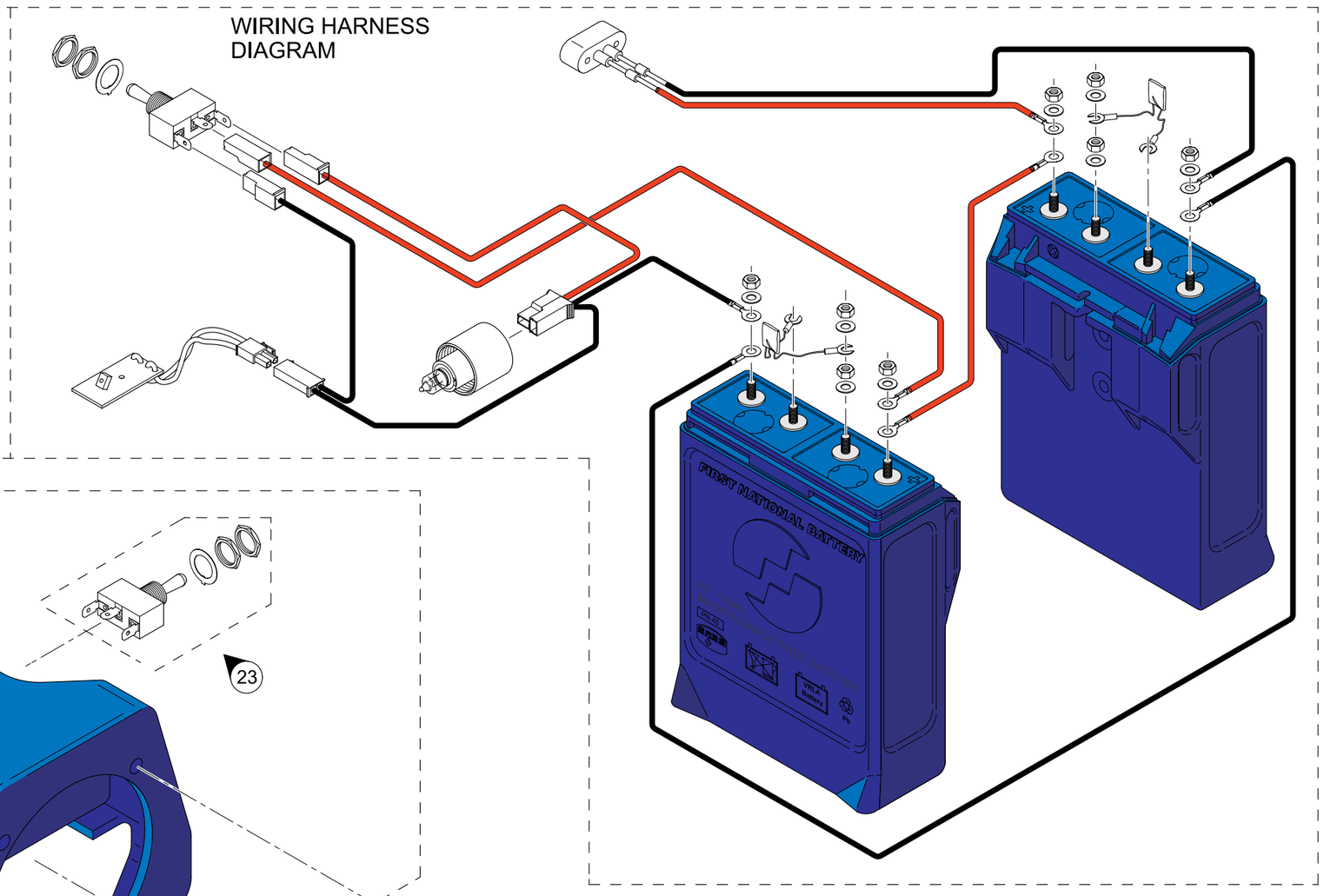

FLAT TOP

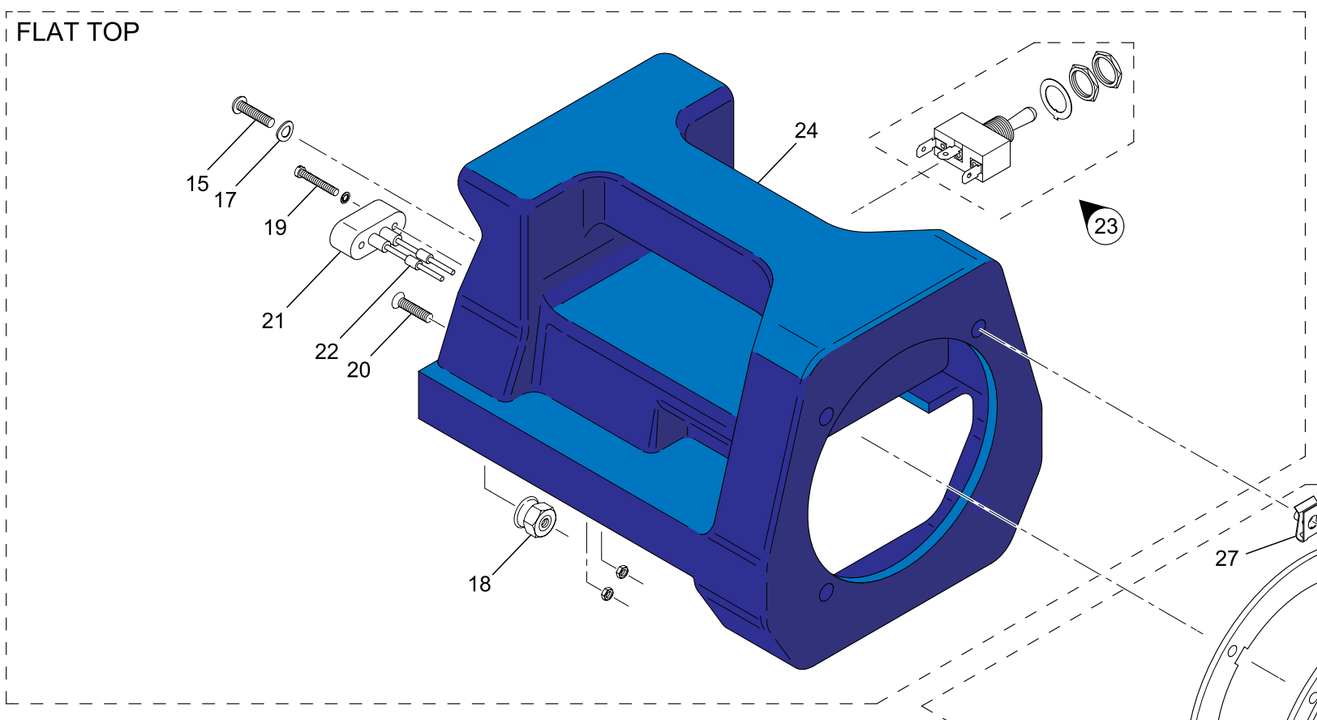

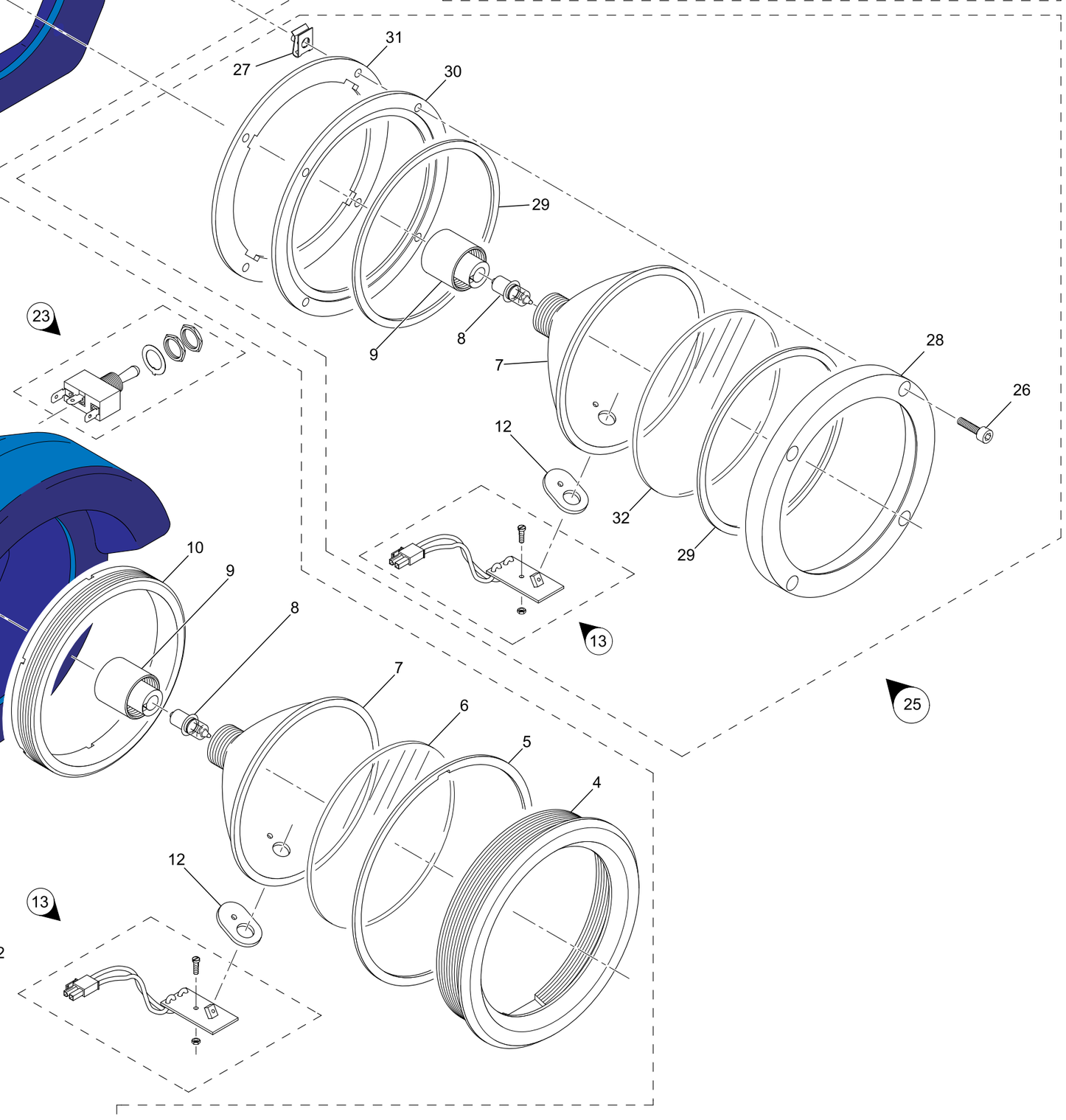

CANOPY TOP

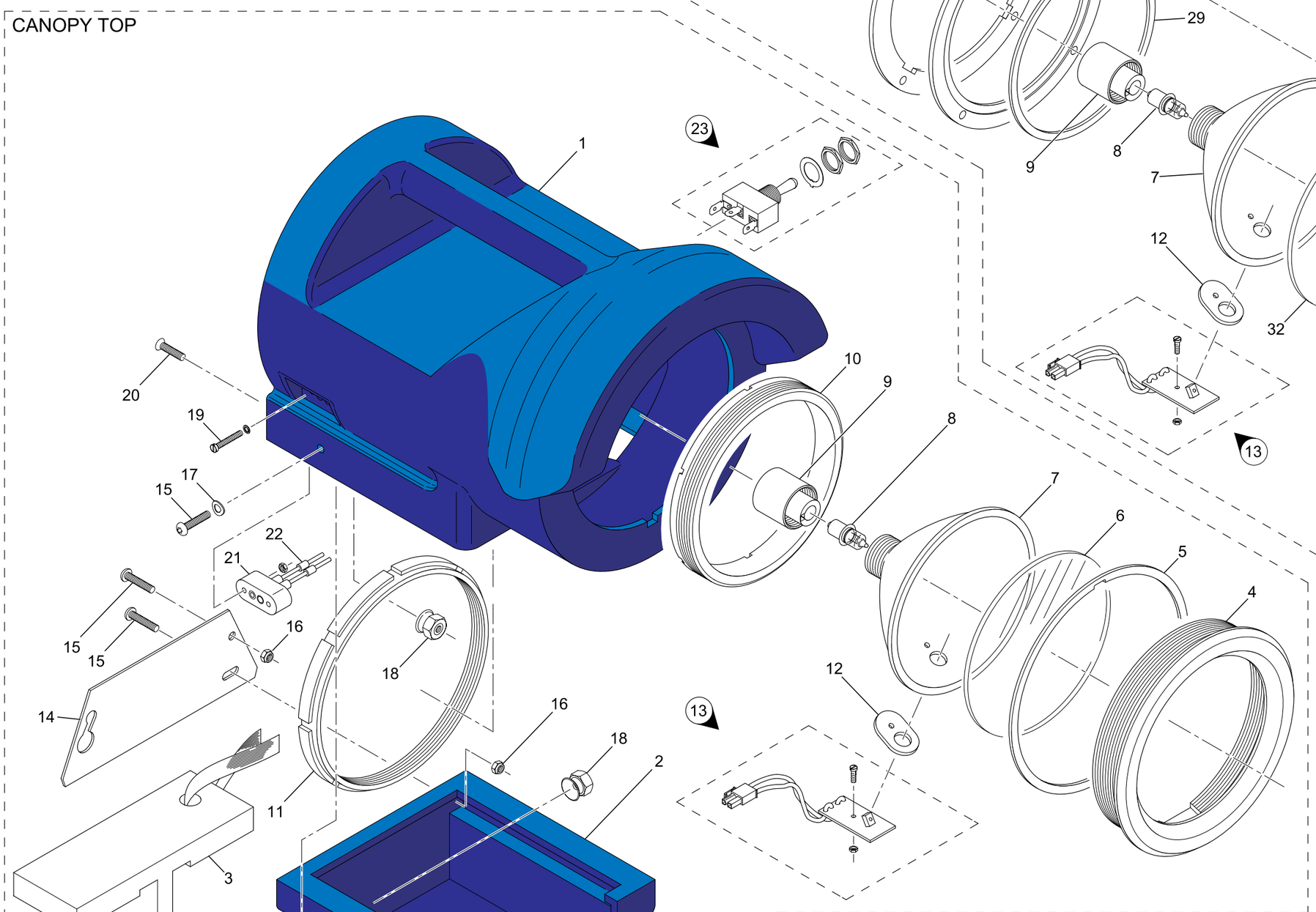

ITEM	QTY	DESCRIPTION	PART #
1	1	Canopy Type Top Cover	103473
2	1	Locolamp Battery Case (Blue)	103419
3	1	Battery Spacer	103345
4	1	Reflector Housing	103470
5	1	Reflector Housing Gasket	103454
6	1	Lens - Polycarbonate	103456
7	1	Plated Reflector	103450
8	1	Halogen Globe 4V 1.4A	100613
9	1	Bulb Holder Assembly	103449
10	1	Reflector Lock Ring	103469
11	1	Reflector Assembly Lock Ring	103471
12	1	LED PCB Gasket	77560
13	1	LED PCB Assembly c/w Screw & Nut	103448
14	1	Bracket (Lock)	103425
15	4	Buttonhead Cap Screw M5x19	103152
16	2	Nyloc Nut M4	103343
17	2	Compression Washer	100019
18	3	Nut	
19	2	Screw M3x15 c/w Washer & Nut	100017
20	1	Countersunk Screw M5x19	103344
21	1	Charging Contact Assembly	103437

ITEM	QTY	DESCRIPTION	PART #
22	2	Diode	103445
23	1	Toggle Switch Assembly	100666
24	1	Flat Top Lamp Housing	103424
25	1	Lens Conversion Kit	103446
26	4	Securing Screws	100011
27	4	Captive Cups	103457
28	1	Bezel	103429
29	2	Lens Gasket	103453
30	1	Backup Plate	103455
31	1	Bezel Gasket - Sponge	103454
32	1	Lens - Glass	103428
33	1	Wiring Kit excluding Toggle Switch	103451
34	1	Wiring Kit including Toggle Switch	103452

ITEM	QTY	DESCRIPTION	PART #
A	1	Flat Top Kit with Accumulators	103422
B	1	Flat Top Kit without Accumulators	103420
C	1	Canopy Top Kit with Accumulators	103475
D	1	Canopy Top Kit without Accumulators	103474